Daiwa
COMMITTED TO TOTAL QUALITY

SPINCASTING REEL **S80A/S80**

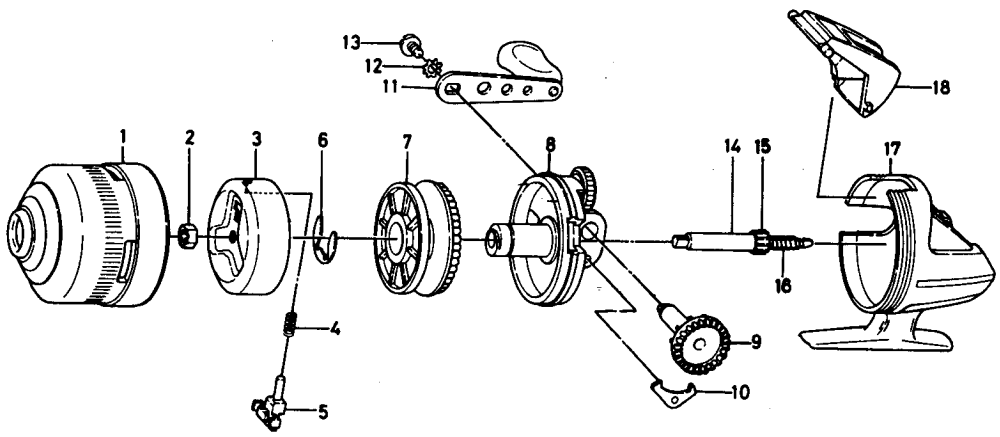

Key No.	Parts No.	Parts Name
1	B79-6201	Front cover
2	B64-4201	Rotor nut
3	B79-6101	Rotor
4	144-1801	Pick up pin spring
5	B08-8206	Pick up pin
6	320-0351	Spool retainer
7	B79-5901	Spool
8	B79-5301	Set plate
9	B08-6301	Drive gear
10	770-0501	Anti-reverse claw
11	B08-7101	Handle
12	160-8001	Handle washer

Key No.	Parts No.	Parts Name	
13	B08-7301	Handle screw	
14	B08-6601	Main shaft	Sold as one unit B08-6501 Main shaft assembly
15	B08-6701	Pinion gear	
16	141-2521	Main shaft spring	
17	B78-6501	Body	
18	B79-5101	Push button	

S80 Special Parts

1	B79-6202	Front cover
8	B79-5302	Set plate
17	B78-6502	Body